CO-10-SF

10[mm] Clamp-On Non-Intrusive Magnetic Field Concentrator

1 General Description

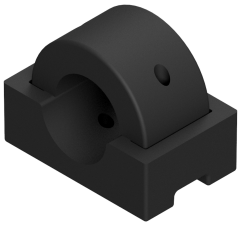

The CO-10-SF magnetic field concentrator, is designed for non-intrusive and isolated measurement of electric currents. Thanks to the Clamp-On design, the contactless current sensor can be safely installed without the need to interrupt or cut the cable.

The CO-10-SF comprises a soft ferromagnetic shield featuring superior material characteristics such as high linearity and very low hysteresis. Applications include DC and AC current sensing up to 30 kHz, motor control, battery monitoring, charge control, white goods,and many more.

CO-10-SF can be paired with any planar magnetic field sensor such as Melexis IMC-Hall® or any GMR/TMR sensor, to create an open loop current measurement system able to measure currents up to ±200 A.

Thanks to its hollow bottom design, CO-10-SF enables the direct housing of a planar current sensor and its capacitors underneath, thus allowing for a compact and space-saving solution.

CO-10-SF can be directly soldered to the PCB thanks to its 4 through-hole pins, granting a robust and secure hold.

2 Features

- RoHS compliant ✔
- Low hysteresis
- High Permeability
- Hall-Sensor Measurement
- High Linearity up to 200 A
- Temperature Range: 10 to 120 $°C$
- DC and AC compatible

3 Advantages

- Snap-Fit installation
- Non intrusive sensing
- Small Size, Lightweight
- Excellent output linearity
- Planar PCB installation

4 Applications

- IoT
- Industrial
- E-metering
- Photovoltaic

Table of Contents

5 Revision History

Revision/Changes	Page
• Revision A: initial datasheet	all

6 Specifications

6.1 Magnetic material specifications

Table 1: Magnetic material specifications

Parameter	Min.	Typ.	Max.	Unit
Relative Permeability	-	100000	-	a.u.
Initial Relative Permeability	-	7000	-	a.u.
Saturation Flux Density	-	1	-	T
Hysteresis	-	2.8	-	A/m
Curie Temperature	-	450	-	°C

[1] Based on material manufacturer specification

6.2 Plastic material specifications

Table 2: Plastic material specifications

Parameter	Value	Unit
Material	Glass reinforced PA6	
Glass-Fiber content	15	%
Min. usage temperature	10	°C
Max. usage temperature	120	°C

[1] Based on material manufacturer specification

6.3 Magnetic gain and linearity error

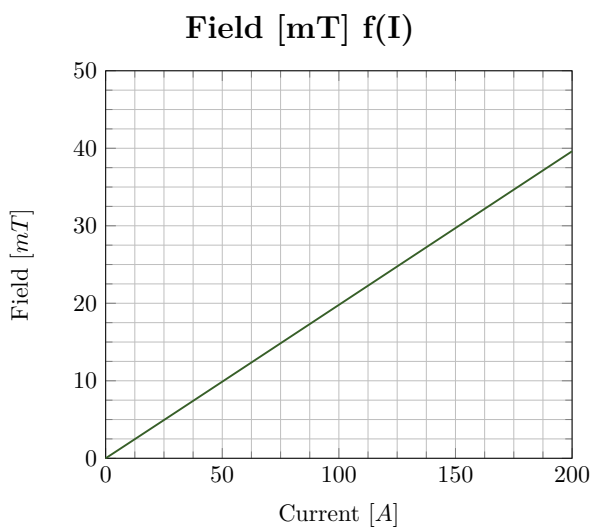

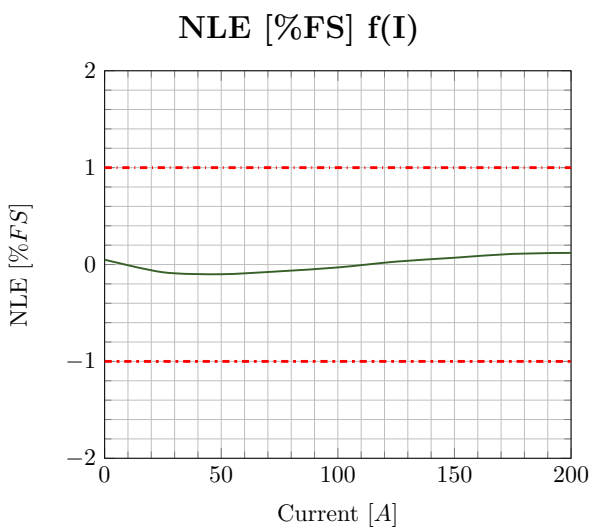

7 Dimensions

Dimensions are expressed in [mm]. Unless otherwise specified, tolerances as per ISO 2768 class-m

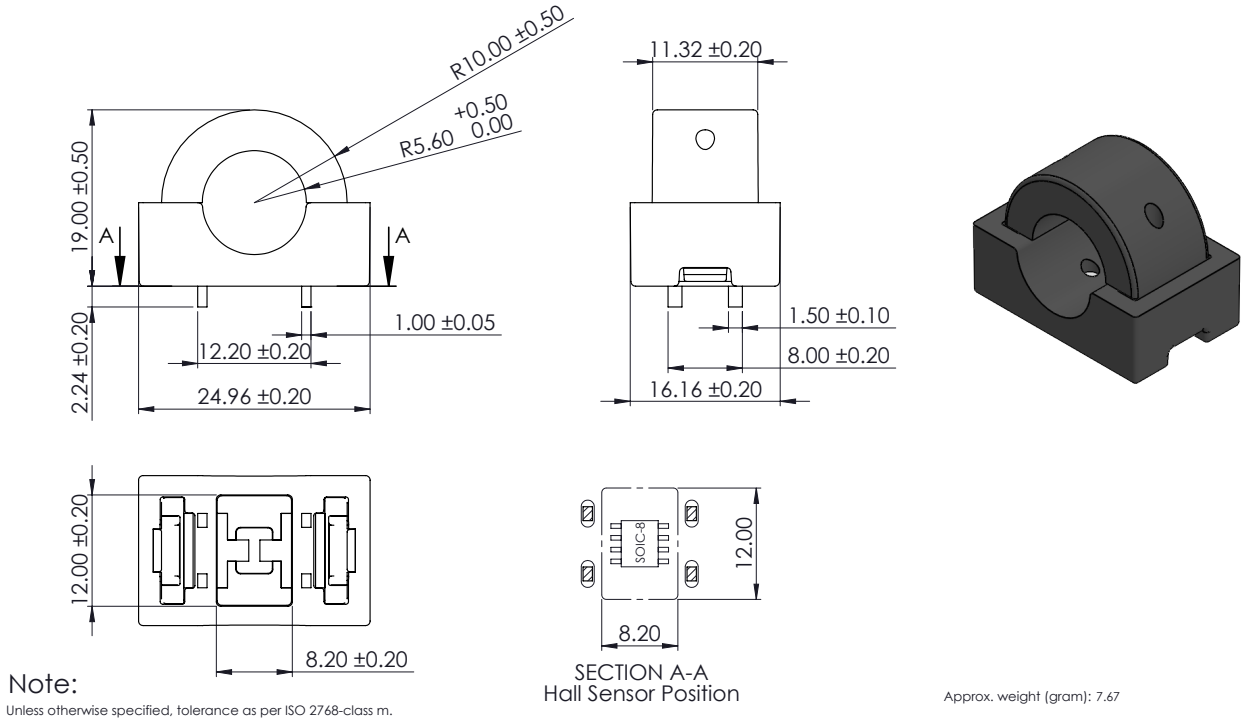

8 Application

8.1 Application example

CO-10-SF can be paired with any planar magnetic field sensor such as Melexis IMC-Hall® or any GMR/TMR sensor, to create an open loop current measurement system able to measure currents up to ±200 A, as illustrated in Figure 1.

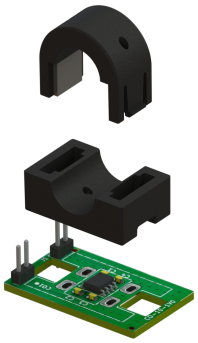

Figure 1: CO-10-SF application example

8.2 Application sensor pairing

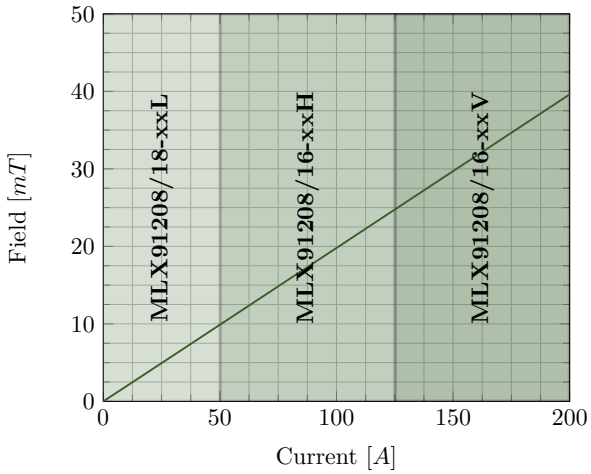

Current Range Peak	Current Sensor
10-50[Apk]	MLX91208/18LDC-xxL
50-125[Apk]	MLX91208/16LDC-xxH
125-200[Apk]	MLX91208/16LDC-xxV

9 Disclaimer

maglab AG provides technical and reliability data, design, reference designs, advice, web tools and other resources "as is". maglab AG disclaims (i) any and all liability in connection with or arising out of the furnishing, performance or use of the technical data or use of the product(s) as described herein("Product") (ii) any and all liability, including without limitation, special, consequential or incidental damages, and (iii) any and all warranties, express, statutory, implied, or by description, including warranties of fitness for particular purpose, non-infringement and merchantability. These resources are intended for skilled developers. You are solely responsible for (1) selecting the appropriate maglab Product for your application, (2) designing, validating and testing your application, and (3) ensuring your application meets applicable standards, and any other safety, security, or other requirements. These resources are subject to change without notice.

maglab's products are provided subject to maglab's terms and conditions as specified in the Terms and Conditions (www.maglab.ch/terms-conditions) or other applicable terms provided in conjunction with such maglab products or offer.

Mailing Address: maglab AG, Güterstrasse 141, CH-4053 Basel

PML disclaimer. Please visit the following link for PML's complete disclaimer:
www.pmlindia.com/pages/pml-disclaimer

Mailing Address: PML, B-3, MIDC Industrial Area, Mira-gaon, Miraroad-East, Thane-401107, Maharashtra, India